

GLM

FEBRUARY 2020 / VERSION 2.0



Introduction

GLM Hellas S.A. is based in the Industrial Area of Kilkis. Aluminum pergolas shading system of ALUMIL S.A., are manufactured and traded exclusively by GLM Hellas.

For the Price List, you should consider that the products have been grouped according to the model of the pergola and the type of the construction (typology).

The price tables refer to structure of the frame without the transom joining elements. For the total price of the pergola, it is necessary to calculate the price of the frame along with the price of the transom joining elements.

Prices of the additional equipment are added to the pergola's price that has been selected.

At the tables below each price refers to the Standard Colors of our catalogue. For any other color, there might be an extra charge.

Prices do not include transportation and installation cost.

For all the tables, please assume that the width of the construction is parallel to the length of the louver and the projection of the construction is the repetition of the louvers.

The company is capable of manufacturing constructions with millimeter precision.

This price list is valid until the next version. The company has the right to modify the prices, types, equipment production methods of the construction, without any obligation to notify.

Contents

Colors Index 4

Product Chart 5

Bioclimatic Pergolas

- Benefits 6
- Mykonos 9
- Santorini 15
- Paros 21
- Additional Equipment
  - Led on Louvers 26
  - Led on Transom 26
  - Shutter 27
  - Glass System 27
  - Add-on for Pergola 27

Fixed Pergolas

- CRETA 29

General Terms 36

Warranty 39

Revision 40

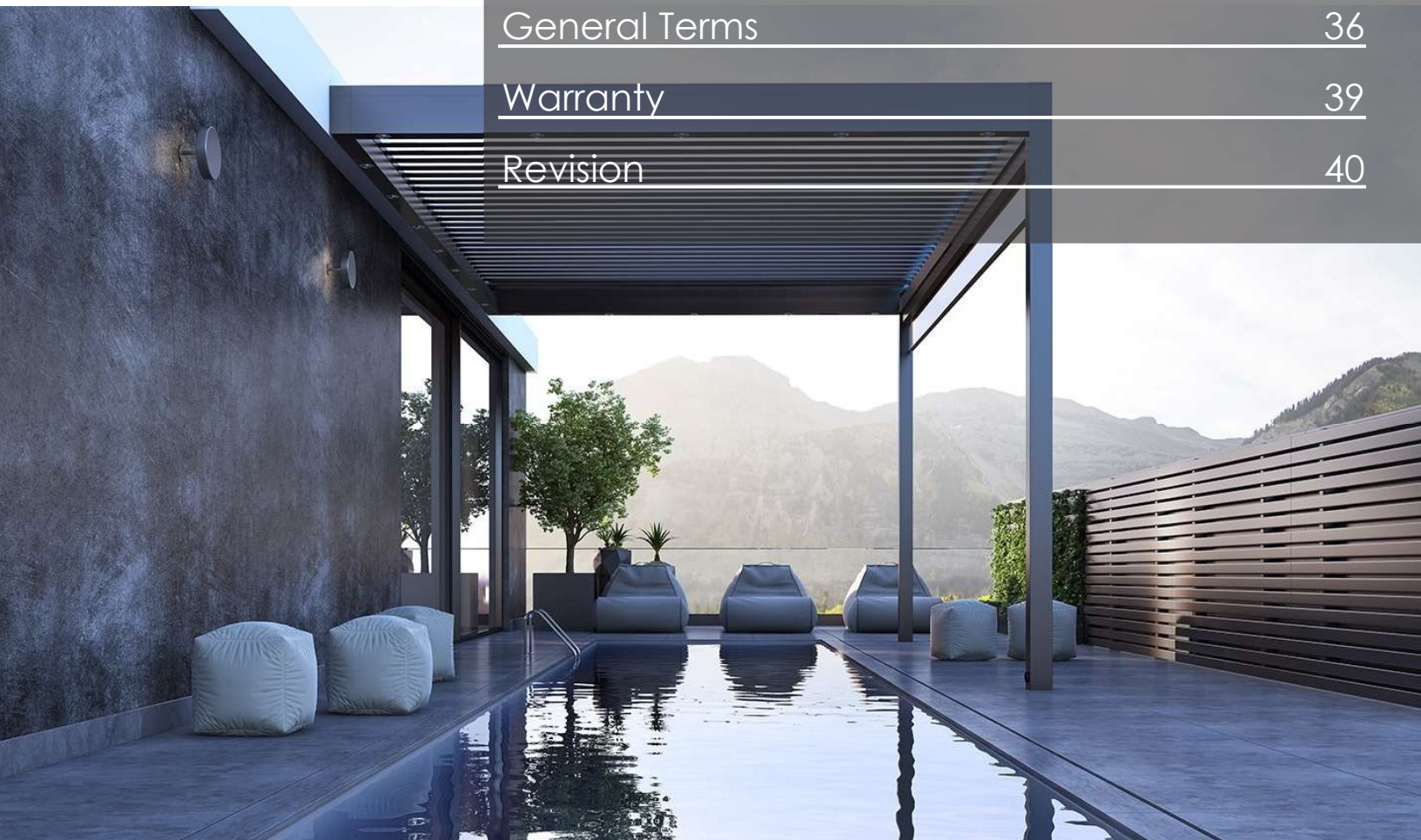

Color Index

Bioclimatic

Base Colors of GLM

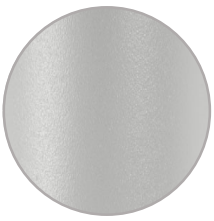
RAL 9006 Stuctura


RAL 9016 Stuctura


RAL 1013 Stuctura


RAL 7016 Stuctura


RAL 7021 Stuctura


RAL 7022 Stuctura


RAL 8014 Stuctura

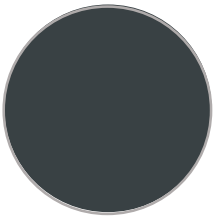
RAL 7016 Matt

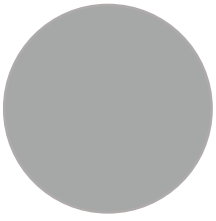
RAL 9006 Matt


RAL 9016 Matt


RAL 1013 Matt

Matt Colors Class 2



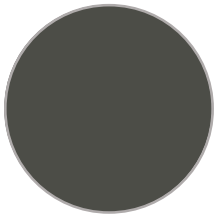
RAL 7022 Matt

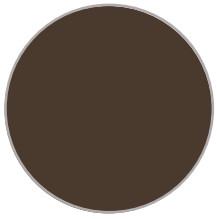
RAL 8014 Matt

Color Surcharge Tables for Bioclimatic Pergolas

Cotegory of Color	Surcharge	Extra Surcharge for Pre-Anodizing	
Base Colors of GLM	0%	Pre-Anodizing	15%
ABC / White	0%		
D	4%		
E	8%		
F	10%		
G	16%		
K	22%		
Wood Effect	27%		

Category of Color	Surcharge	Extra Surcharge for Brush or Deep Brush	
Natural	10%	Brush or Deep Brush	5%
Classic Color	15%		
Gold - Inox	20%		

Price Coverage Plan

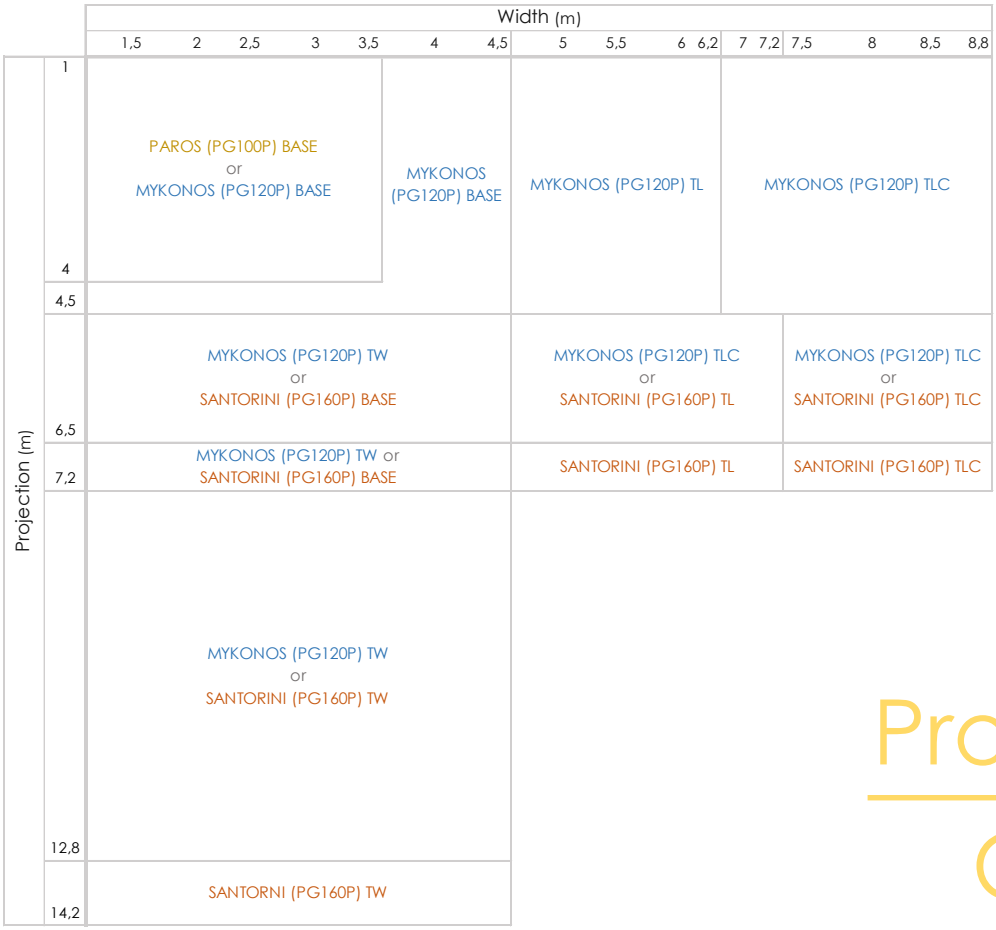

Product Chart

Product Chart

	SANTORINI PG160P	MYKONOS PG120P	PAROS PG100P	CRETA PG120F
Model	Bioclimatic	Bioclimatic	Bioclimatic	Fixed
Custom	•	•		•
Max Dimensions of Frame (Base)	7,2 m x 4,5 m (7,5 m x 4,5 m)	6,5 m x 4,5 m	4 m x 3,5 m	6 m x 4 m
Max Height of Free Standing Pergola	3 m	3 m	2,7 m	3 m
Rain Proof	•	•	•	
Drainage	•	•	•	
Motor	•	•	•	
Torsion Spring Coil	•	•		
Louvers Rotation Angle	0° - 135°	0° - 135°	0° - 135°	
Remote Control	5-channels	5-channels	1-channel	
NINA Remote Control (99-channels)	Upon Request	Upon Request	Upon Request	
Page of Pergola	10	16	22	30
Base Color	•	•	•	
Colors Upon Request	Page 4			Page 30
LED on Louvers	•	•		
LED on Transom	•	•		
LED on Column	Upon Offer	Upon Offer		
LED Spots on Transom	Upon Offer	Upon Offer		
Shutter	•	•		
Glass System	•	•		
Heater on Transom	Upon Offer	Upon Offer		
Rain Sensor	Upon Offer	Upon Offer		
CE UNI EN 13561	Wind Resistance Class 3	Wind Resistance Class 3	Wind Resistance Class 3	Wind Resistance Class 3



Unparalleled Benefits

Aesthetics and design

Minimal design and high aesthetics without compromising functionality to assure unlimited comfort and exceptional living conditions. No visible fixing points and a totally concealed motor. Effective shading solutions that upgrade your surrounding environment.

Rotating louvers

The rotating louvers create a very robust and electrically adjustable shutter structure (0 – 135°) for controlled sun-shading, regulated brightness and airflow, as well as effective protection against and harsher weather conditions.

Noiseless rotation mechanism

Our bioclimatic models integrate a unique and patented rotation system, totally concealed and inserted in one of the louvers, to grant outstanding reliability as well as flawless and noiseless operation.

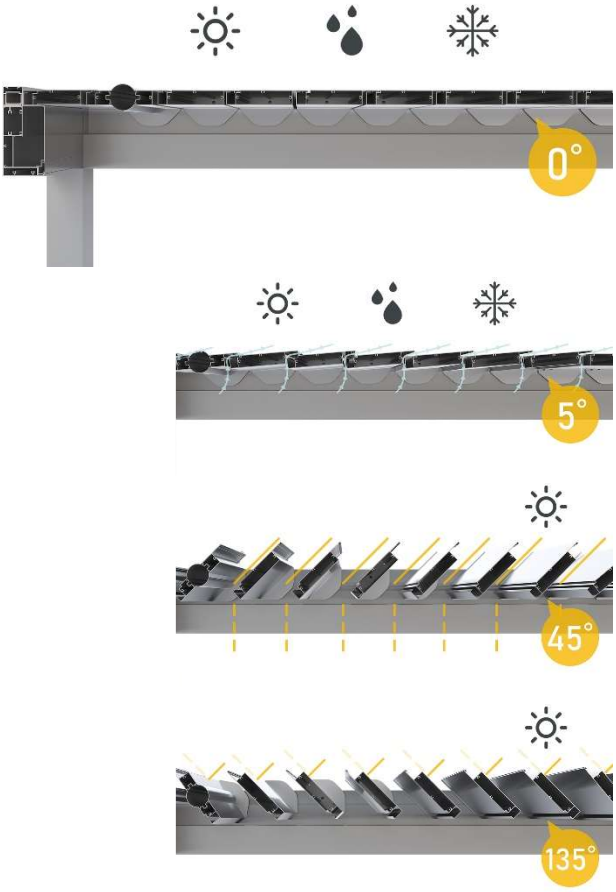

Special water sealing

Everything has been designed in detail to prevent protentional problems due to rainwater.

- Efficient sealing is applied along the entire water path (from louvers to ground).
- Wide gutters and other profile sections to prevent any water overflow.
- Guarantees long-lasting performance.

Ease of installation

The sophisticated design with modular profiles and hook-type accessories guarantees uniquely easy and fast installation.

The whole structure can be implemented in less time, saving time and cost, without compromises on performance.



GLM



MYKONOS

PG120P

The Mykonos model is more than a classic choice for controlled solar shading and total rain protection. Apart from exceptional functionality, the model is characterized by absolute minimalism and top sturdiness, offering elegant and quite large structures up to 6.5 m x 4.5 m in the freestanding version.

- Highly functional, concealed and noiseless mechanism.
- Sufficient water sealing and drainage.
- Absolute minimal design.
- Structures with top sturdiness.
- Very large dimensions.

MYKONOS

PG120 P

DIMENSIONS

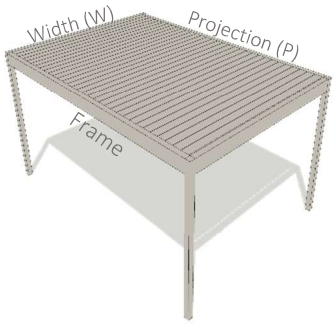

BASE

Maximum Dimensions:
6500 mm x 4500 mm
Projection x Width

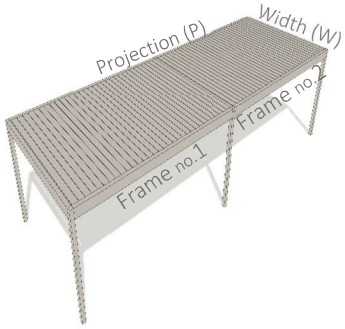

TW

Maximum Dimensions:
12800 mm x 4500 mm
Projection x Width

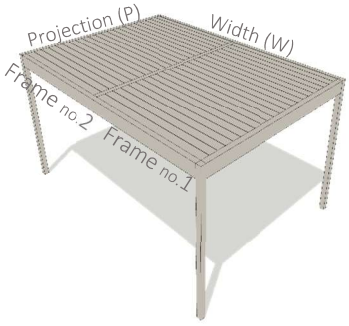

TL

Maximum Dimensions:
4500 mm x 6200 mm
Projection x Width

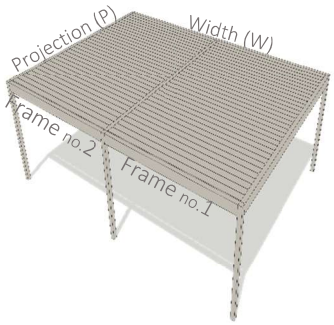

TLC

Maximum Dimensions:
6500 mm x 8800 mm
Projection x Width

SECTIONS

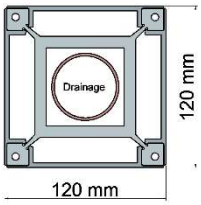

Column

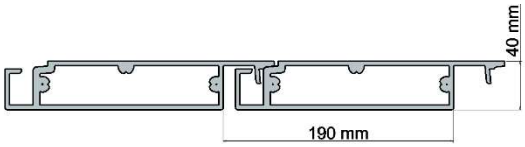

Louver

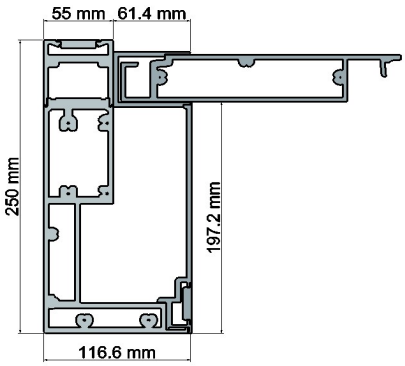

Transom

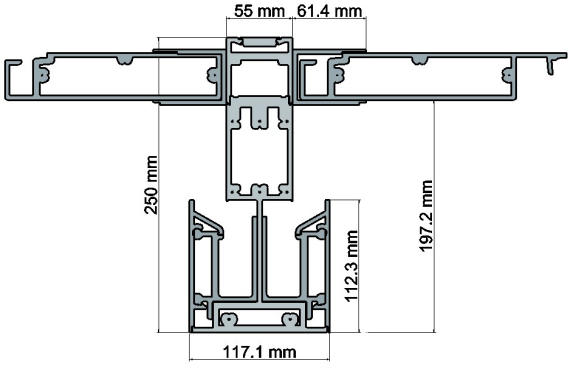

Intermediate Transom

BASE

MYKONOS

PG120 P

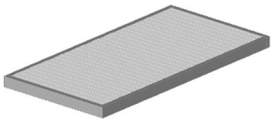

Without Columns:
Requires
4 Wall Connectors

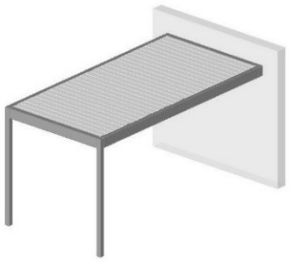

Wall Mounted:
Requires
2 Wall Connectors and
1 Pair of Column

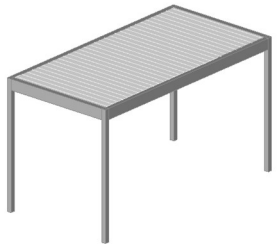

Free Standing:
Requires
2 Pairs of Columns

For fine adjustment onto the wall construction, select the Upper Cover and the Lower Support (Page 27).

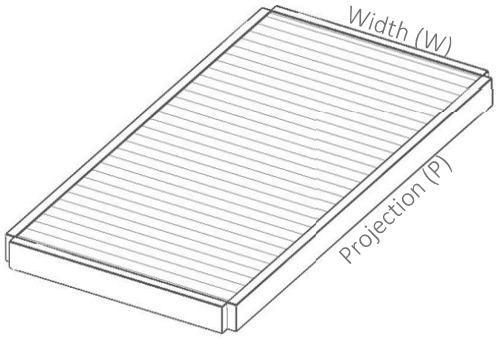

BASIC TYPOLOGIES

MYKONOS

PG120 P

PRICE LIST

TW

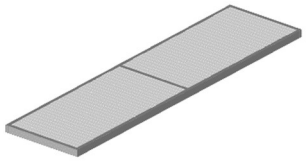

Without Columns:
Requires
4 Wall Connectors and
2 Intermediate Joins

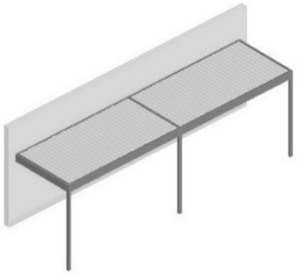

Wall Mounted:
Requires
2 Wall Connectors,
1 Intermediate Join,
1 Column and 1 Pair of Column

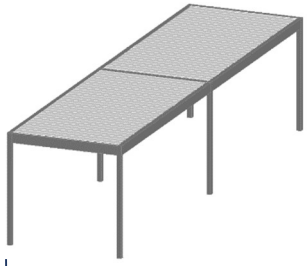

Free Standing:
Requires
3 Pairs of Columns

For fine adjustment onto the wall construction, select the Upper Cover and the Lower Support (Page 27).

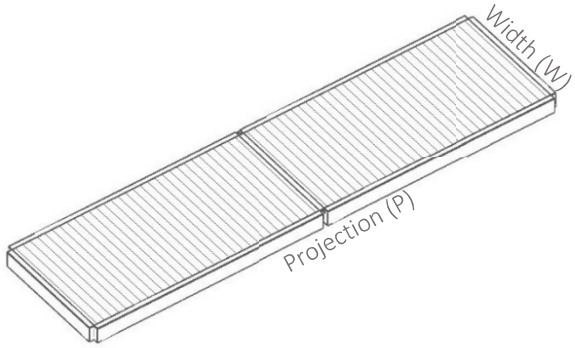

BASIC TYPOLOGIES

TL

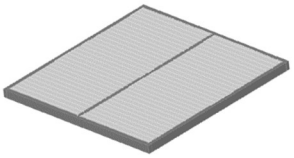

Without Columns:
Requires
4 Wall Connectors

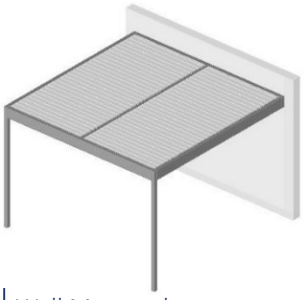

Wall Mounted:
Requires
2 Wall Connectors and
1 Pair of Column

MYKONOS
PG120 P

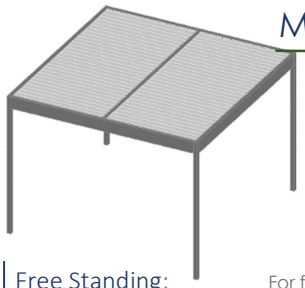

Free Standing:
Requires
2 Pairs of Columns

For fine adjustment onto the wall construction, select the Upper Cover and the Lower Support (Page 27).

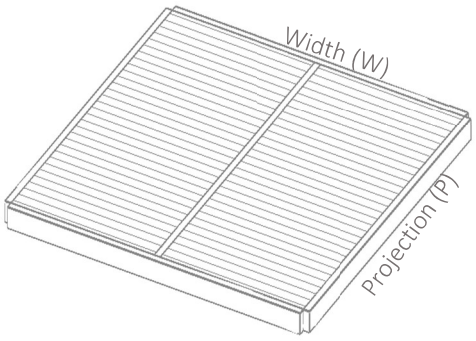

BASIC TYPOLOGIES

MYKONOS
PG120 P

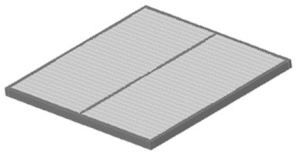

Without Columns:
Requires
4 Wall Connectors and
2 Intermediate Joins

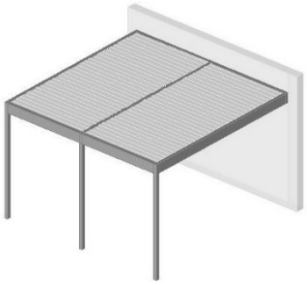

Wall Mounted:
Requires
2 Wall Connectors,
1 Intermediate Join,
1 Column and 1 Pair of Column

TLC

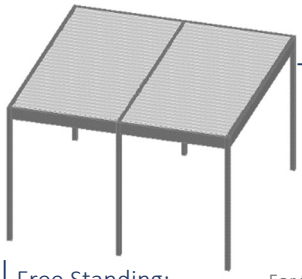

Free Standing:
Requires
3 Pairs of Columns

For fine adjustment onto the wall construction, select the Upper Cover and the Lower Support (Page 27).

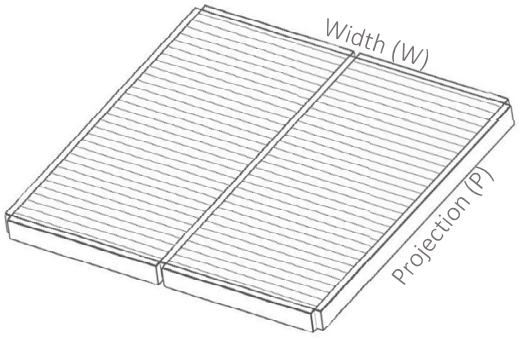



SANTORINI

PG160P

The Santorini model offers extreme robustness and the ability to create large constructions up to 7.2 m x 7.2 m, rendering it a superb system beyond the ordinary.

- In the case of hotels, restaurants and commercial spaces, multiple structures can cover and efficiently protect large areas with fewer posts, thus allowing placement of many tables underneath, while drainage is done only through the perimetrical posts.
- In residential use, a yard of 50 m^2 can be converted into an extraordinary living space, with regulated shading and ventilation.

SANTORINI

PG160 P

DIMENSIONS

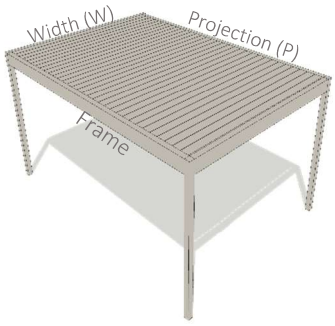

BASE

Maximum Dimensions:
7200 mm x 4500 mm
Projection x Width

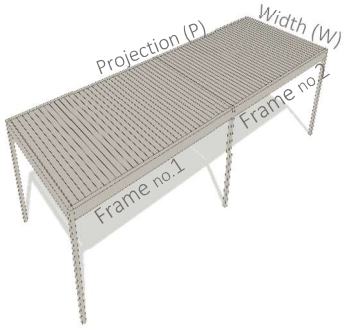

TW

Maximum Dimensions:
14200 mm x 4500 mm
Projection x Width

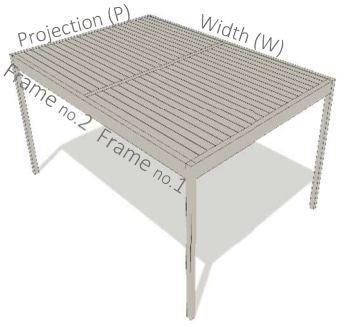

TL

Maximum Dimensions:
7200 mm x 7200 mm
Projection x Width

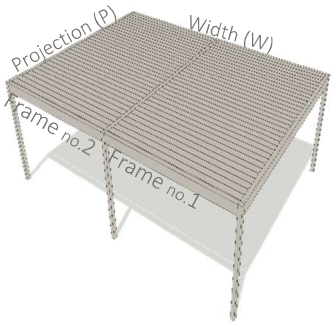

TLC

Maximum Dimensions:
7200 mm x 8800 mm
Projection x Width

SECTIONS

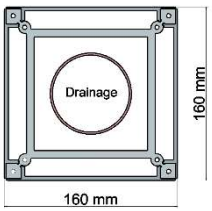

Column

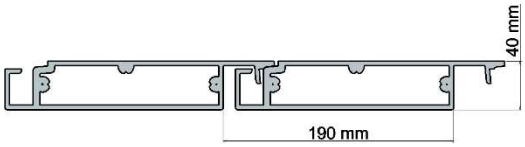

Louver

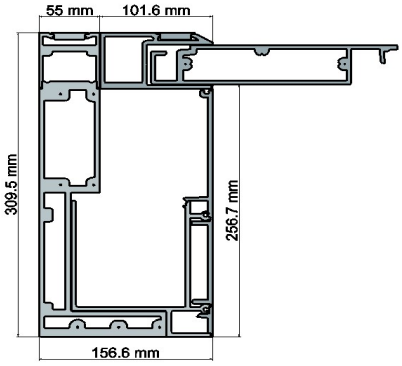

Transom

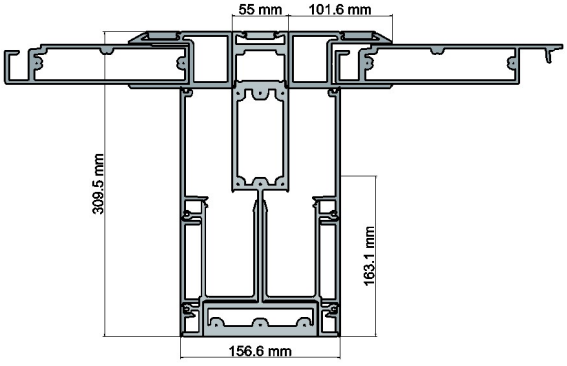

Intermediate Transom

PRICE LIST

BASE

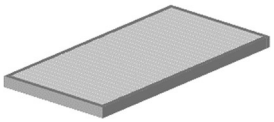

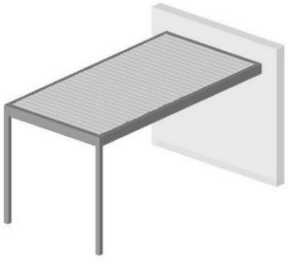

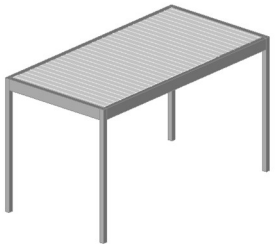

SANTORINI

PG160 P

Without Columns:
Requires
4 Wall Connectors

Wall Mounted:
Requires
2 Wall Connectors and
1 Pair of Column

Free Standing:
Requires
2 Pairs of Columns

For fine adjustment onto the wall construction, select the Upper Cover and the Lower Support (Page 27).

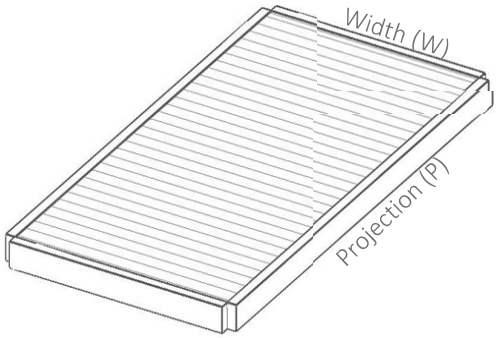

BASIC TYPOLOGIES

SANTORINI

PG160 P

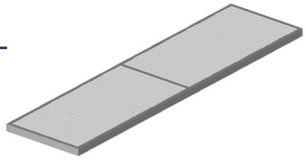

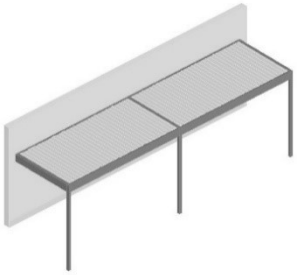

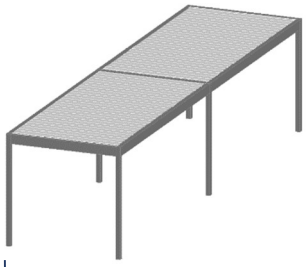

TW

Without Columns:
Requires
4 Wall Connectors and
2 Intermediate Joins

Wall Mounted:
Requires
2 Wall Connectors,
1 Intermediate Join,
1 Column and 1 Pair of Column

Free Standing:
Requires
3 Pairs of Columns

For fine adjustment onto the wall construction, select the Upper Cover and the Lower Support (Page 27).

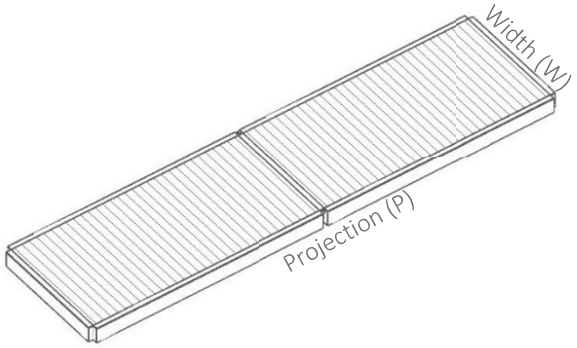

TL

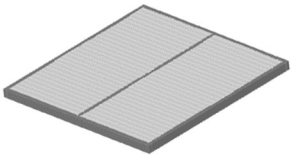

Without Columns:
Requires
4 Wall Connectors

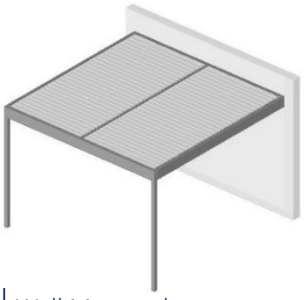

Wall Mounted:
Requires
2 Wall Connectors and
1 Pair of Column

SANTORINI

PG160 P



Free Standing:
Requires
2 Pairs of Columns

For fine adjustment onto the wall construction, select the Upper Cover and the Lower Support (Page 27).

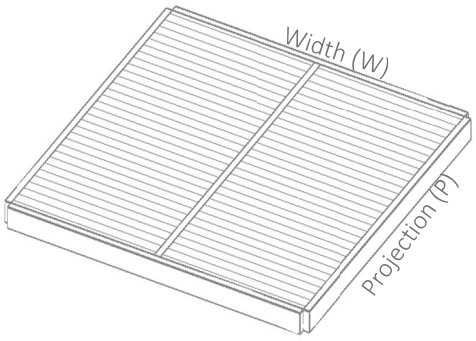

BASIC TYPOLOGIES

SANTORINI

PG160 P

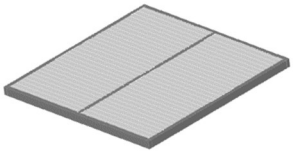

Without Columns:
Requires
4 Wall Connectors and
2 Intermediate Joins

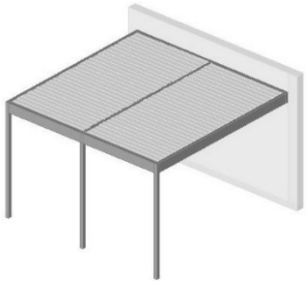

Wall Mounted:
Requires
2 Wall Connectors,
1 Intermediate Join,
1 Column and 1 Pair of Column

TLC

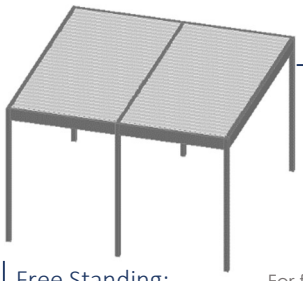

Free Standing:
Requires
3 Pairs of Columns

For fine adjustment onto the wall construction, select the Upper Cover and the Lower Support (Page 27).

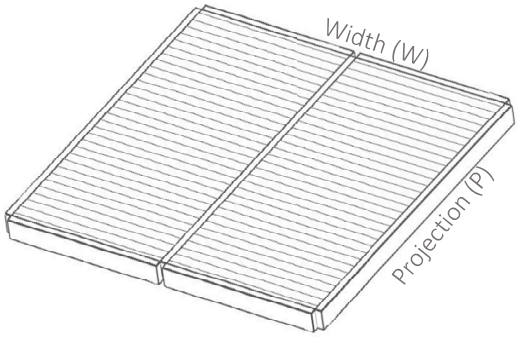



Additional Equipment

Thanks to the bioclimatic design philosophy, essential parts can be additionally integrated to create controlled shading, ventilation and temperature. Our pergolas literally extend your indoor space, converting it into a new living room to be used all year round.

- Additional shading either with special rolling fabric screens or with aluminum sliding shutters.
- Integrated glass partition system, creating pleasant and full of sunlight spaces with controlled conditions.
- Dimmable LED lights applied on transoms and louvers, providing sufficient and stylish lighting at night.



LED stripes on Louvers and LED stripes on Transoms can only be combined with pergolas PG120P and PG160P.

Number of Louvers and Total Meter refer per Frame and per Electrical Circuit.

Prices refer to the combination of pergolas and LED stripes and their prices are added to the pergola's price that has been selected.

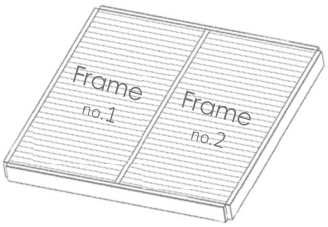

LED on LOUVER

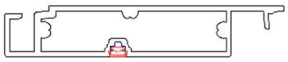

LED FEATURES

3200K Warm White, IP65,
24 V, 9.6 W/m,
1050 Lumens/m, 98 LED/m.

LED on TRANSOM

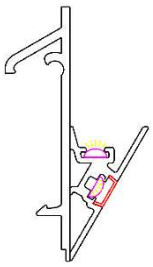

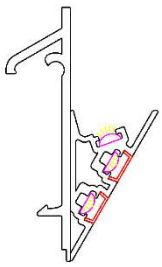



Shutter and Glass System can only be combined with pergolas PG120P and PG160P.

SHUTTER GLASS SYSTEM ADD–ONS for PERGOLA



GLM HELLAS S.A.

Kilkis Industrial Area
Block 11, PO box 19
Kilkis, GR 61100

T: +30 2341071100

Info@glmhellas.com
www.alumilpergolas.com

www.alumilpergolas.com
GLM Hellas SA
GLM Hellas S.A.
glm_hellas