SMARTIA

	SANTORINI PG160P	MYKONOS PG120P	PAROS PG100P	CRETA PG120F
Model	Bioclimatic	Bioclimatic	Bioclimatic	Fixed
Custom	•	•		•
Max Dimensions of Frame (Base)	7,2 m x 4,5 m (7,5 m x 4,5 m)	6,5 m x 4,5 m	4 m x 3,5 m	6 m x 4 m
Max Height of Free Standing Pergola	3 m	3 m	2,7 m	3 m
Rain Proof	•	•	•	
Drainage	•	•	•	
Motor	•	•	•	
Torsion Spring Coil	•	•		
Louvers Rotation Angle	0° - 135°	0° - 135°	0° - 135°	
Remote Control	5-channels	5-channels	1-channel	
NINA Remote Control (99-channels)	Upon Request	Upon Request	Upon Request	
Page of Pergola	10	16	22	30
Base Color	•	•	•	
Colors Upon Request		Page 4		Page 30
LED on Louvers	•	•		
LED on Transom	•	•		
LED on Column	Upon Offer	Upon Offer		
LED Spots on Transom	Upon Offer	Upon Offer		
Shutter	•	•		
Glass System	•	•		
Heater on Transom	Upon Offer	Upon Offer		
Rain Sensor	Upon Offer	Upon Offer		
CE	Wind Resistance Class 3	Wind Resistance Class 3	Wind Resistance Class 3	Wind Resistance Class 3

SMARTIA
PG120P

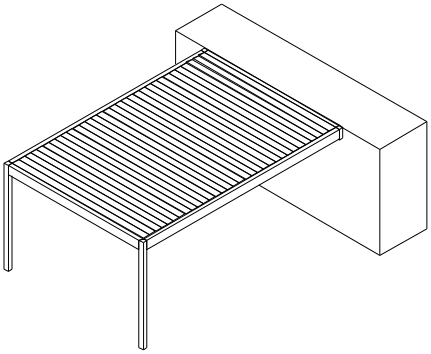

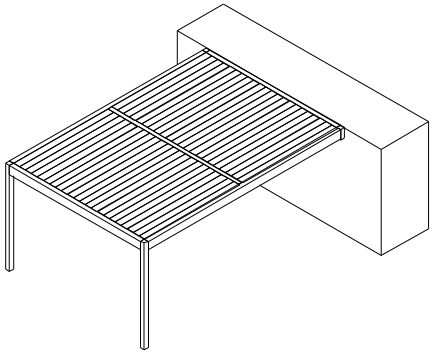

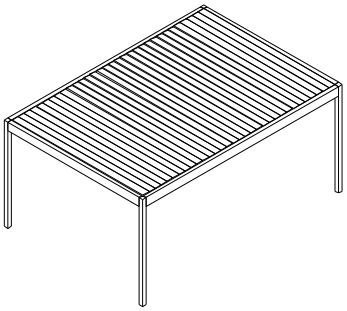

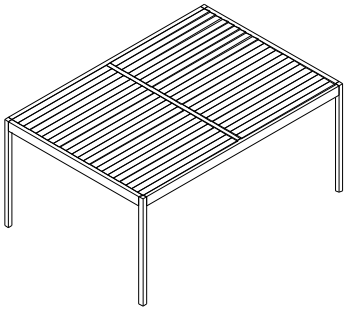

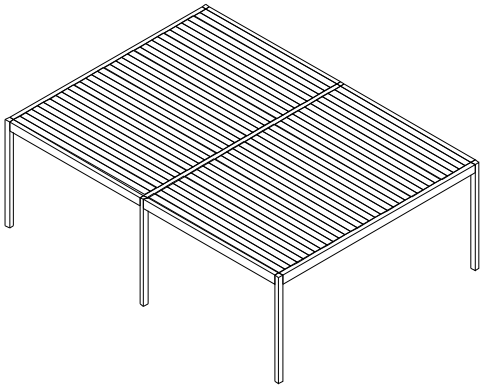

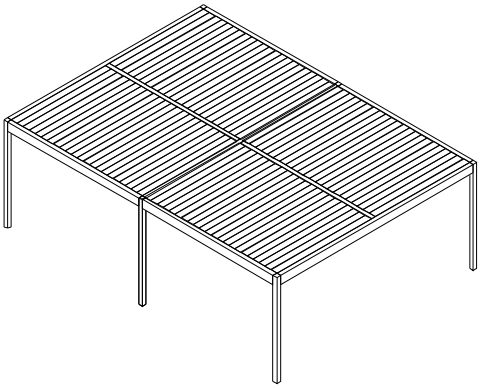

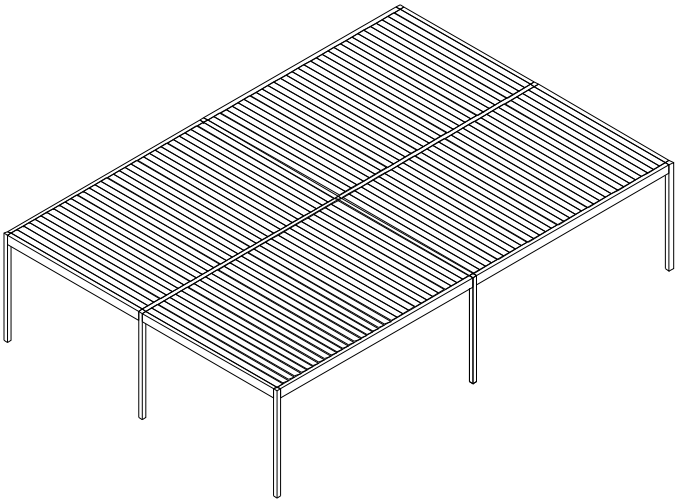

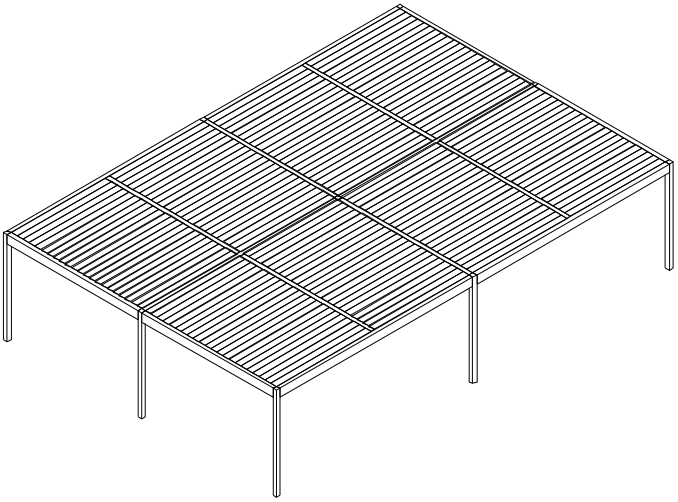

SMARTIA
PG160P

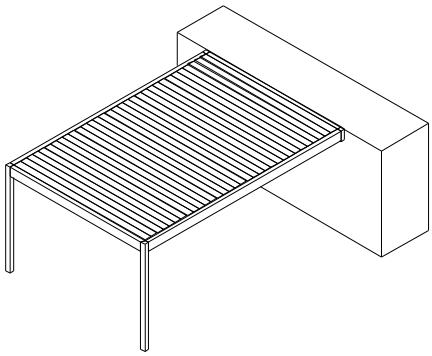

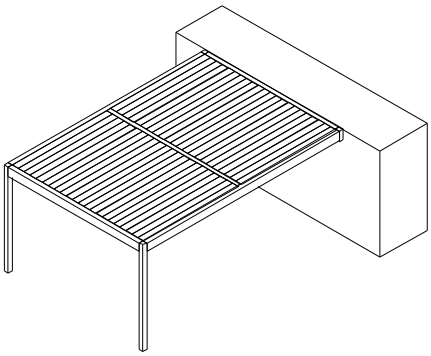

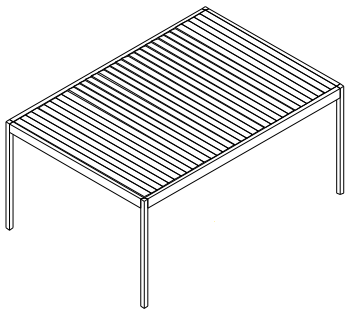

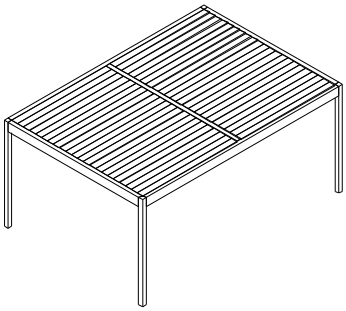

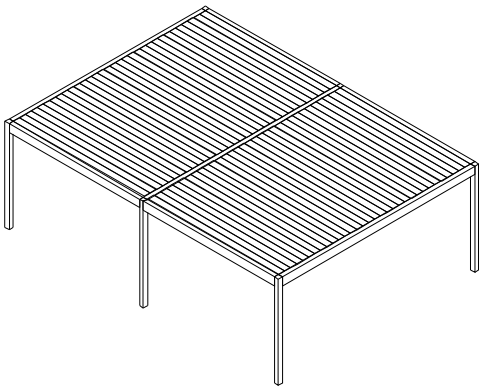

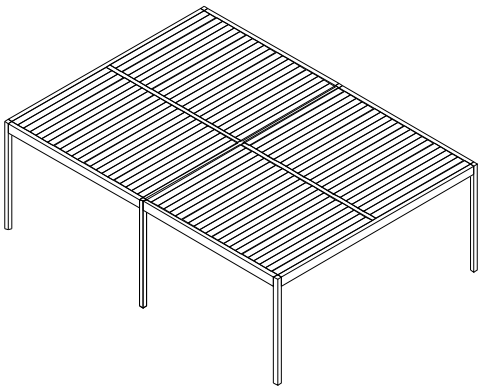

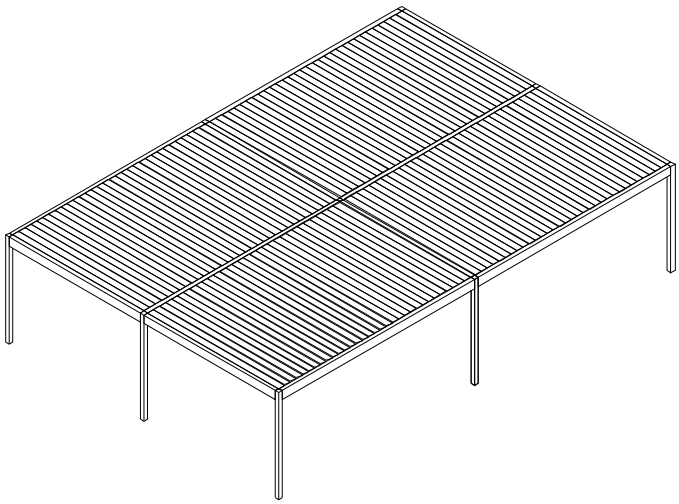

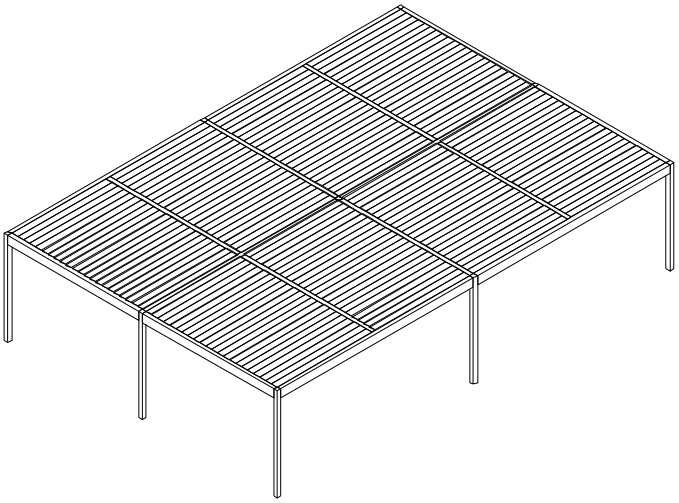

SMARTIA
PG160P

